HS-M

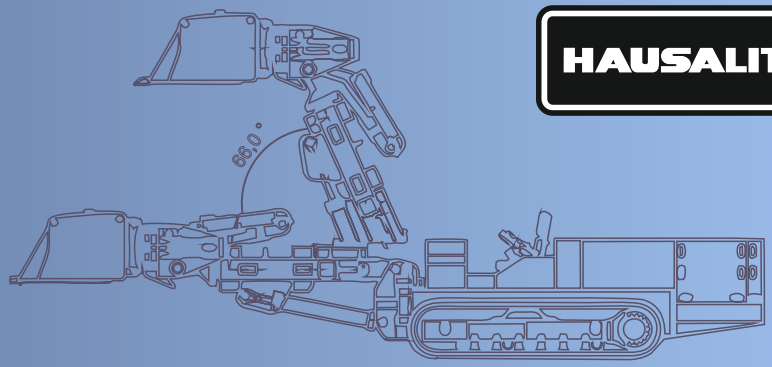

HAUSALIT

the MULTITALENT dinting-& loading machine

1 Machine - 5 Uses

basicmachine with teleskopic boom and patented

quick-coupler-system with integrated

automatic coupling of hydraulic hoses

hydraulic pick

traverse-cutting-head

+

ripping bucket 450 l

working platform

activated dinting bucket
with rigid boom

WITHOUT
quick-coupler-system

side-dump-bucket with bent boom

HAUSALIT GmbH Mining - Hydraulik - Maschinenbau
Justus-von-Liebig-Straße 2 - D-66280 Sulzbach/Saar
Tel.: +49-(0)6897-5005-0 - Fax: +49-(0)6897 -5005-55
e-mail: info@hausalit.com - http://www.hausalit.com

HS-M

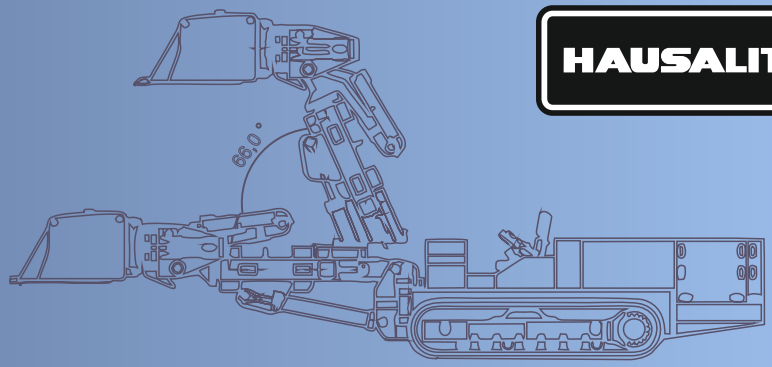

HAUSALIT

MULTITALENT Dinting and loading machine

Basic machine

Technical description

The development and design of the HS-MULTITALENT base of the concept of only one basic machine, as carrier vehicle, on which is possible to install various booms and other attachments for several application areas in mining industry and tunneling.

The newest generation of our machine is the HS-MULTITALENT with telescopic boom and quick-coupler-system, with integrated fully automatic coupling of hydraulic hoses and represents therefore a further milestone in the development of efficient dinting technology. This quick-coupler-system makes it possible to change the diverse attachments in a few minutes because it is no longer necessary to change over the hoses.

The **basic machine** is a compact and durable construction of combinable modules with:

- ergonomically designed and clearly arranged control stand
- pivot column and swing cylinders for receiving the various booms
- unscrewable chassis.
- crawler chassis driven by variable displacement plug-in motors and compact gears
- Load-Sensing regulated hydraulic system
- joy stick controls with mining safety device
- fully hydraulic with electric or pneumatic primary drive

The pivot column and the swing cylinders makes possible to move the boom with 27° to the right and left. The various tools on the boom can be pivoted additionally around 30°.

The **machine fuselage** is durably built and is used to attach the following components:

- Crawler undercarriage
- Rear with the drive unit
- Cooling unit
- Additional tank
- Driver and control stand
- Pivot column

HS-M

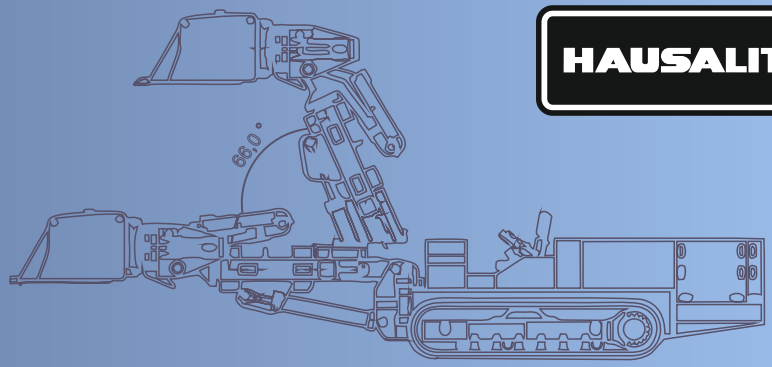

HAUSALIT

MULTITALENT Dinting and loading machine

Basic machine

Technical Data- Basic Machine

Length	mm	3.920
Width	mm	1.160
Height	mm	1.210
Weight	kg	8.200
	Load-Sensing servo controlled	
Primary Drive (electric)	KW	55
Axial-Piston-Pump	l/min	180
Operating Pressure	bar	180
Oil-Water-Cooler	KW	55-155
Oil Tank	Liter	250
Filter		
Main Filter	400l/min	25µ
Return Filter	400l/min	16µ
Fluid	Type	HFC-E, Mineral oil
Size	Type	B1
Chain	Links	39
Pitch	mm	140
Width	mm	260
Ground clearance	mm	200
Travelling speed	m/sec	0,5/1,0
Drive	compact gearboxes with variable displacement plug-in motors	

HS-M

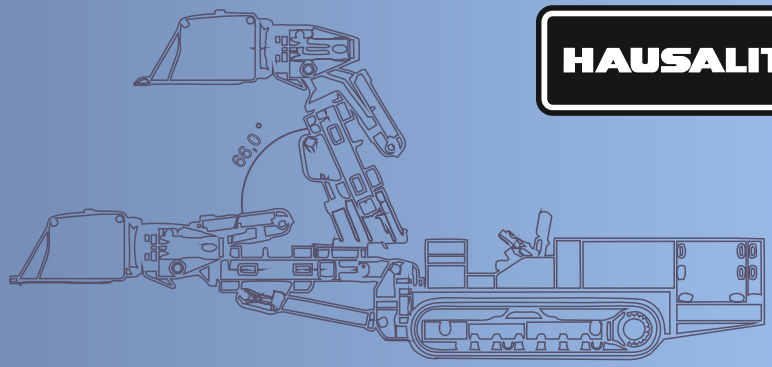

HAUSALIT

MULTITALENT Dinting and loading machine

Basic machine

Dimensional drawing of the basic machine

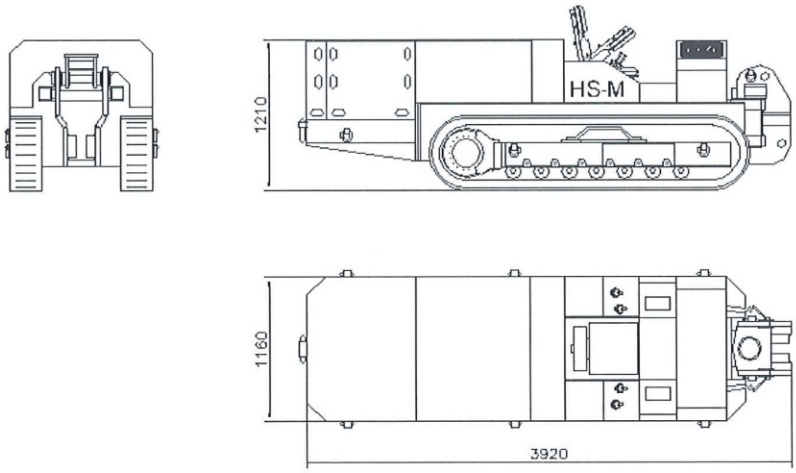

Schema HS-M as dinting machine with possible components

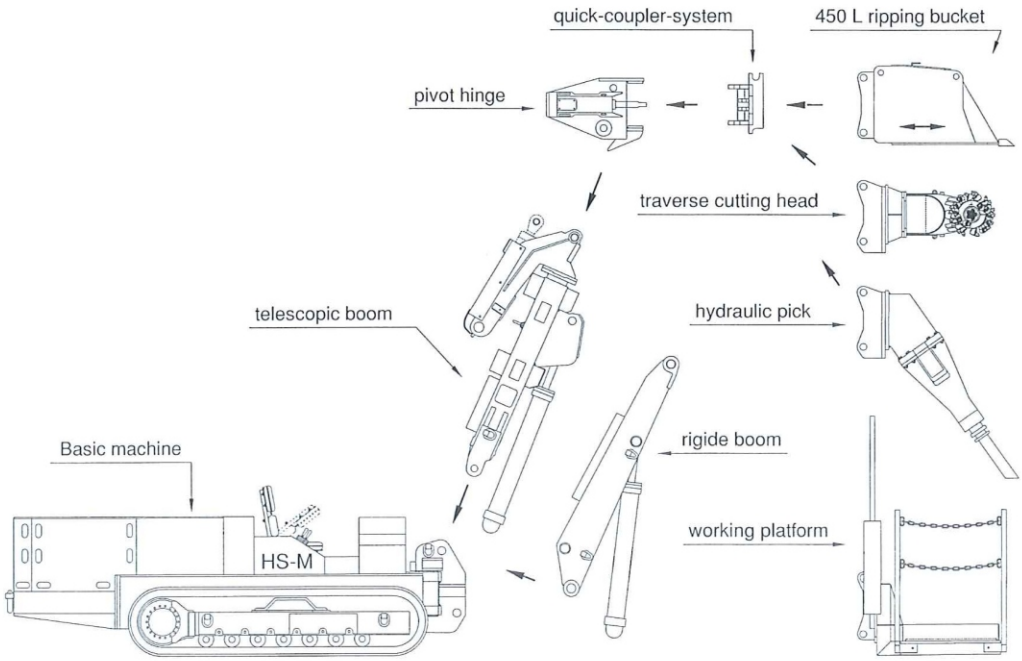

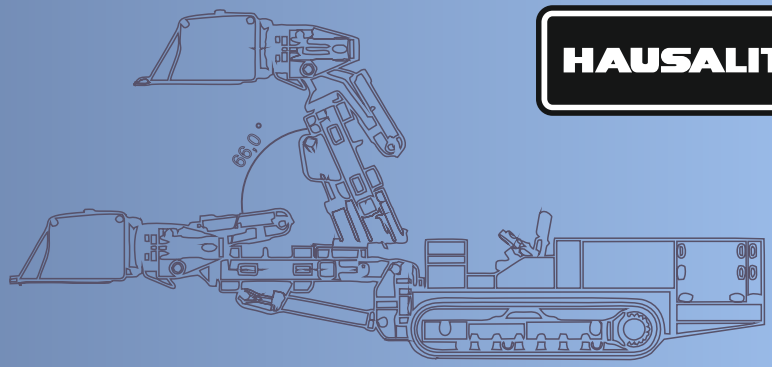

HAUSALIT

HS-M

MULTITALENT Dinting and loading machine

Various booms

The following booms can be mounted on the pivot column:

Teleskopic boom

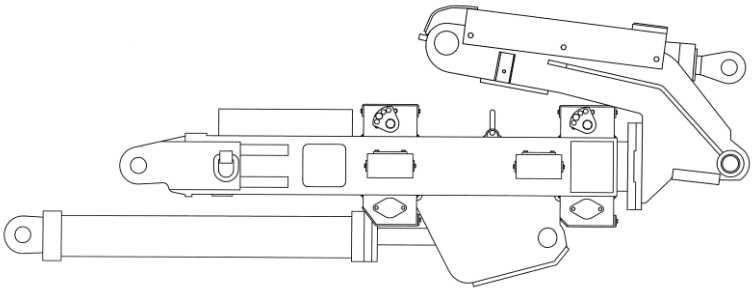

Rigide boom

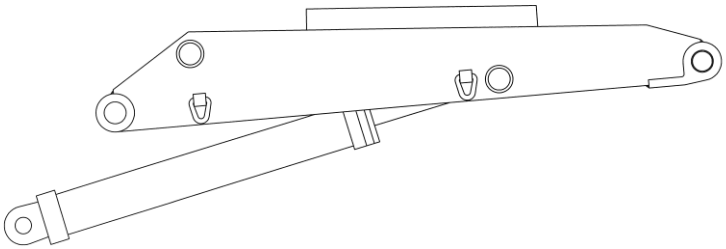

Bent boom

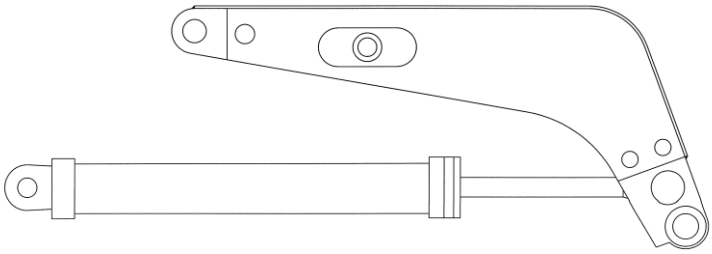

HS-M

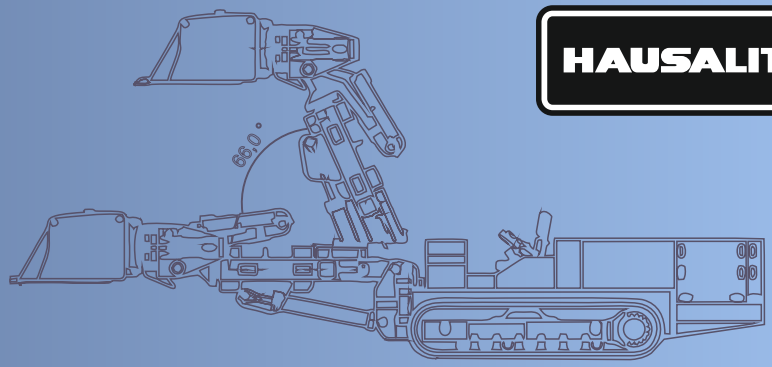

HAUSALIT

MULTITALENT Dinting and loading machine

Quick-coupler-System

with integrated automatic coupling of hydraulic hoses
for tool-change in minutes
- adaptable on telescopic boom -

The newest generation of our machine is the HS-MULTITALENT with telescopic boom and quick-coupler-system, with integrated fully automatic coupling of hydraulic hoses and represents therefo a further milestone in the development of efficient dinting technology. This quick-coupler-system makes it possible to change the diverse attachments in a few minutes because it is no longer necessary to change over the hoses.

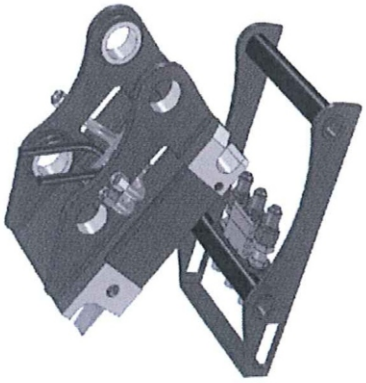

hydraulic pick

traverse-cutting-head

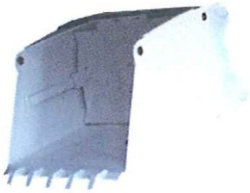

ripping bucket
450L/350L

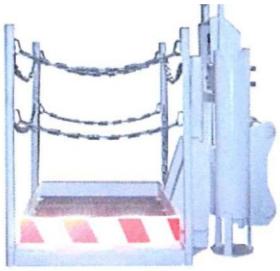

working platform

HS-M

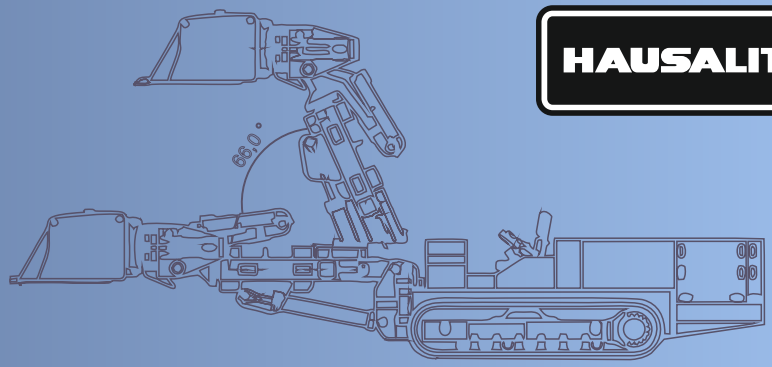

HAUSALIT

MULTITALENT Dinting and loading machine

As dinting machine
with

- **Teleskopic or rigide boom**
- **Quick-coupler-system**
- **Ripping bucket 450 l/350 l or activated bucket 350 l***

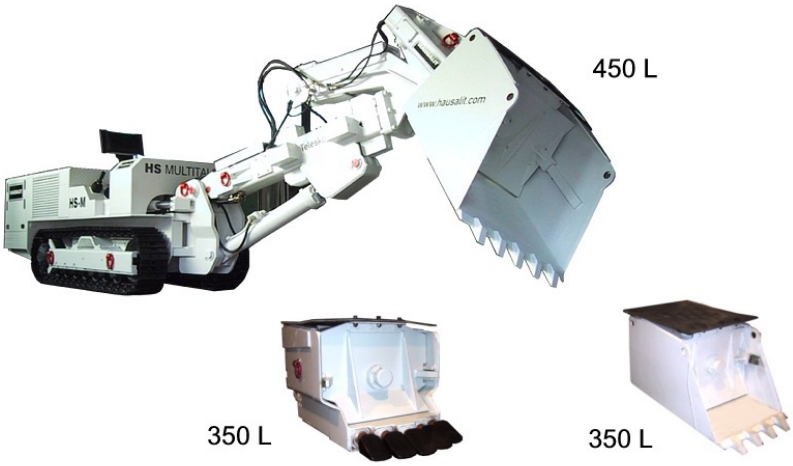

Technical Data HS-M as Dinting Machine					
		Telescopic boom 500 mm piston stroke		Rigide boom	
		Bucket 450L	Bucket 350L	Bucket 450L	Bucket 350L
Overall length	mm	7.500 (8.000)	7.160 (7.590)	7.430	7.090
Total weight	kg	10.120 kg	10.055 kg	9.680 kg	9.615 kg
Slewing range					
Boom		27°	27°	27°	27°
Bucket		30°	30°	30°	30°
Dinting width from single position	mm	3.370 (3.790)	3.210 (3.670)	3.300	3.150
Unloading height	mm	2.795 (3.245)	2.755 (3.200)	2.720	2.680
max. bank	gon	8	8	12	12
max. Gradeability ±	gon	25	25	25	25

* only adaptable on rigide boom without quick-coupler-system

HS-M

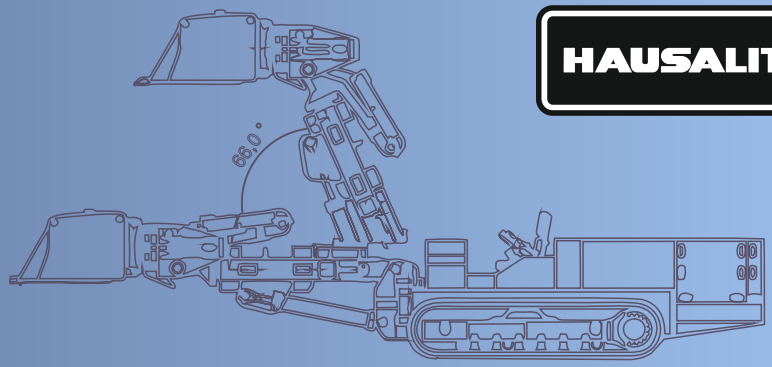

HAUSALIT

MULTITALENT Dinting and loading machine

As ripping machine
with

- **Teleskopic or rigide boom**
- **Quick-coupler-system**
- **Hydraulik pick SB Scaler**

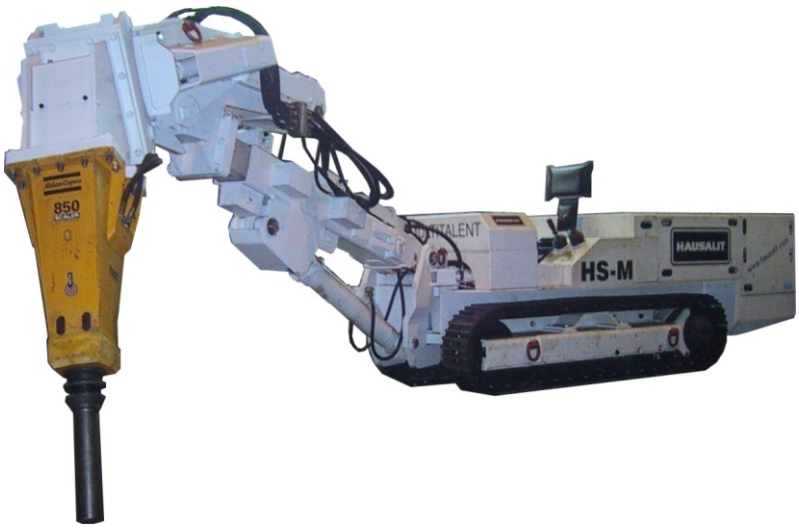

Technical Data Hydraulic pick		
Length excl. working tool	mm	925
Service weight incl. adapter	kg	ca. 580
Impact rate	1/min	900-1010
Operating pressure	bar	100-110
Oil flow rate	l/min	50-100
Working tool diameter	mm	95

HS-M

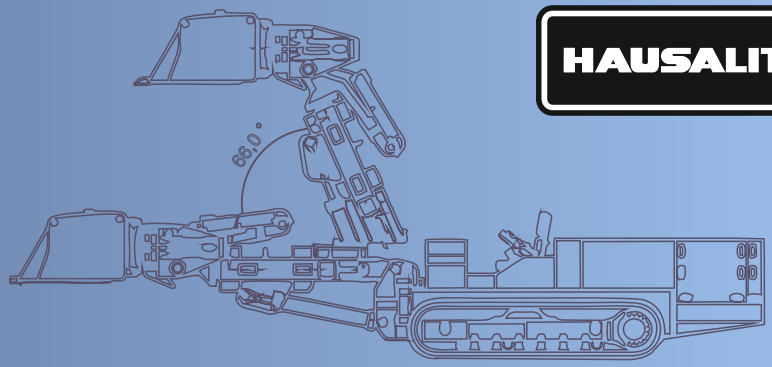

HAUSALIT

MULTITALENT Dinting and loading machine

As cutting machine
with

- **Teleskopic or rigide boom**
- **Quick-coupler-system**
- **Traverse cutting head series ER 250 or ER 600**

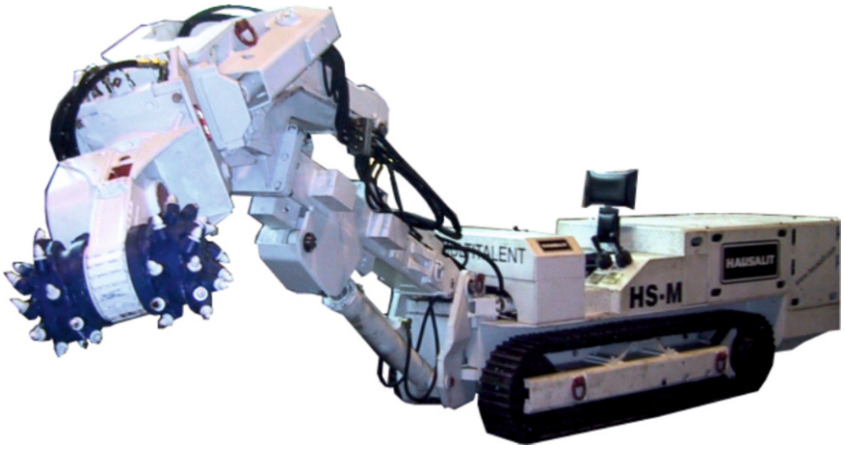

Technical Data Traverse cutting head				
Traverse cutting head	**Series ER 250**		**Series ER 600**	
cutting head diameter	400 mm	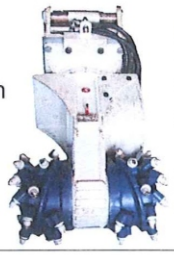	575 mm	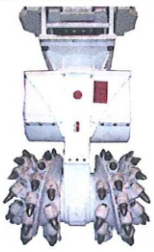
cutting head width	620 mm		780 mm	
oil-flow	40 bis max. 100 l/min		120 bis max. 170 l/min	
oil pressure max. p.	350 bar		350 bar	
max. resistance to compression of the rock	40 Mpa		50 Mpa	
weight	450 kg		900 kg	

notes:

In practice larger rock hardnesses could be worked on by optimised arrangement and number of picks.

For series ER 600 the machine must be operated with electric motor ≥ 60 KW and axial-piston pump with oil-flow of 200 l/min.

HS-M

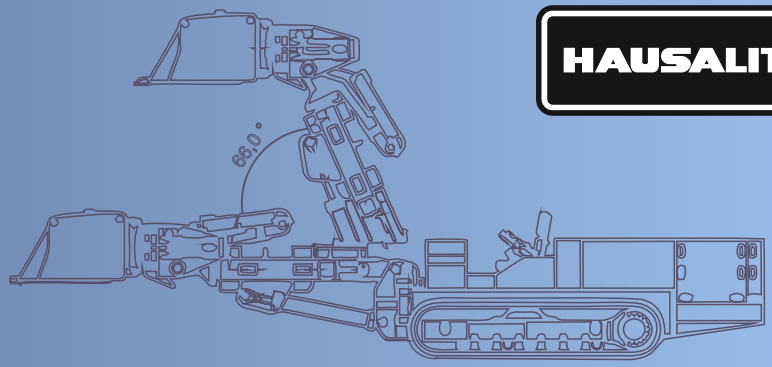

MULTITALENT Dinting and loading machine

As platform machine
with

- **Teleskopic or rigide boom**
- **Quick-coupler-system**
- **Working platform HSB 500; HSB 2000 or HSB-HY 500**

HS-M

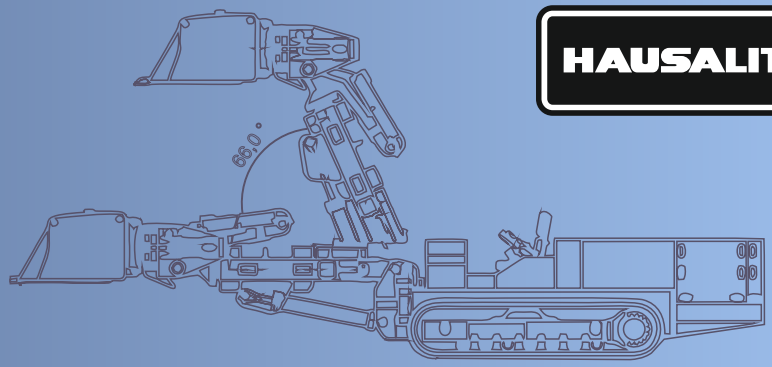

HAUSALIT

MULTITALENT Dinting and loading machine

As platform machine

Technical Data Working platforms			
Arbeitsbühne	**HSB 500**	**HSB 2000**	**HSB-HY 500**
cage surface max. capacity	895 x 1.125 mm 500 kg	1.850 x 1.125 mm 250 kg	895 x 1.125 mm 500 kg with hydraulic control
	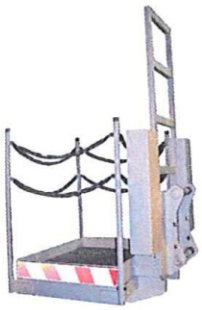		

HS-M

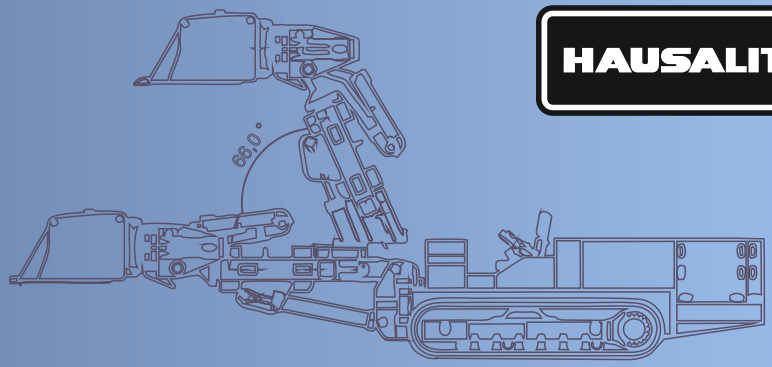

HAUSALIT

MULTITALENT Dinting and loading machine

As loading machine
with

- **Bent boom**
- **Side-dump-bucket 600 l**